IPC2453-HNB-PIR30

4.0MP HD Network Mini IR Bullet Camera

Features

Excellent Image Quality
- 4.0 Megapixel 1/3" Progressive Scan CMOS Sensor
- High definition and smooth picture, 2592×1520@20fps
- H.265 video codec, saves up to 50% bandwidth and storage
- Low illumination, 0.05lux with color picture
- WDR / HLC / 3D noise reduction

Mini size
- 0.6 kg / 1.32lb (Gross Weight)
- 161.5 x 62 x 57mm / 6.36" x 2.44" x 2.24"

Intelligent Functions
- Motion detection / Tampering / Guard line / Enter guard area / Exit guard area

Integrated High Efficiency IR
- Industrial IR LED with long operational lifespan
- 30m IR distance
- Smart IR function

A Variety of Installation Modes
- Supports 90°, 180°, 270° image rotation

Abundant Functions and Features
- Micro SD card slot, supports Automatic Network Replenishment (ANR)
- Dual-stream (2592×1520 + D1)
- Anti-fog glass
- -40°C ~ 70°C operation temperature
- PoE
- IP67

Specifications

	IPC2453-HNB-PIR30
Camera	
Image Sensor	1/3" progressive scan CMOS
Pixels	4.0 Megapixel
Min. Illumination	Color: 0.05lux B/W: 0lux with IR
Shutter Speed	1 ~ 1/30,000s
Day / Night	Auto (ICR) / Color / B/W
Wide Dynamic Range	Digital WDR
S/N Ratio	>50dB
White Balance	Auto / Manual
Gain Control	Auto / Manual
Backlight Compensation	Off / WDR / BLC / HLC
Lens	
Mount Type	M12
Focal Length	3.6mm (-L0360) / 6mm (-L0600)
Angle of View	78.6° (-L0360) / 53.2° (-L0600)
Infrared	
IR Distance	30m (-L0360, -L0600)
IR Intensity	Smart IR
Video	
Compression	H.265 / H.264 / MJPEG
Image Resolution	Main stream: 2592×1520 Secondary stream: D1
Frame Rate	Main stream: 2592×1520@20fps, 2048×1520@25fps, 1080p@30fps Secondary stream: D1@30fps
Bitrate	64kbps ~ 16Mbps
Bitrate Control	VBR / CBR
Dual-stream	Supported
Caption	Date and time / Alarm / Customized
Privacy Masking	Up to 4 zones
Motion Detection	Up to 4 zones
ROI	Supported
Digital Noise Reduction	3D noise reduction
Digital Defog	Supported
Image Flip	Flip / Mirror / Rotation at 90°, 180°, 270°
Network	
Network Protocols	TCP/IP, UDP, HTTP, DHCP, DNS/DDNS, RTP/RTCP, RTSP, PPPoE, FTP, VSIP, UPnP, 802.1x, NAT, QoS, SMTP, IPv4, IPv6 (optional)
User Interface	IPC Control (IE, Firefox, Chrome)
Max. User Access	Max. 10 Users (includes 2 internal)
Application Programming	ONVIF (Profile S, Profile G), GB/T 28181-2011, API, CGI
Automatic Network Replenishment (ANR)	Supported
Alarm	
Alarm Triggers	Network disconnect / Disk full / Disk error
Intelligent	Motion detection / Tampering / Guard line / Enter guard area / Exit guard area
Alarm Events	Alarm report / Recording / Text overlay / Snapshot / Email notice
Interfaces	
Ethernet	10/100M, RJ45 interface
Memory Slot	Micro SD card slot, supports up to 128GB
Environmental	
Operating Temperature	-40°C ~ 70°C / -40°F ~ 158°F
Operating Humidity	10% ~ 95%
Protection Level	IP67
Electrical	
Power	12V DC ± 10% / PoE (IEEE802.3af)
Power Consumption	Max. 7W
Mechanical	
Weight	0.6 kg / 1.32lb (Gross Weight)
Dimensions	161.5 x 62 x 57mm / 6.36" x 2.44" x 2.24"
Mounting Bracket	Bracket included

Dimensions
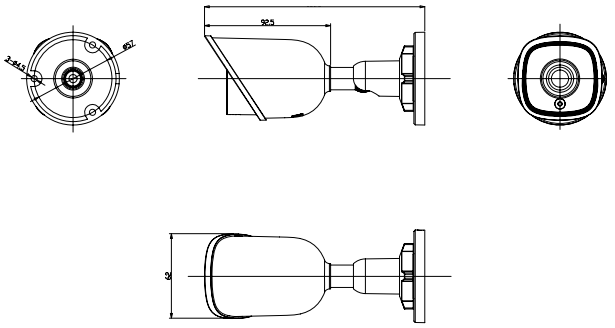
Units:mm